# CYW920820M2IPA1
# CYPRESS CYW20820 M.2 BT/BLE RADIO MODULE

## CONTENTS


| PAGE | DESCRIPTION |
|---|---|
| 01 | Title Page |
| 02 | Block Diagram |
| 03 | Baseband |
| 04 | Radio |
| 05 | Interface to Baseboard |
| 06 | Revision History |


## Drawing Numbers

| | |
|---|---|
| PCBA | 121-90729-01 |
| PCB | 600-90729-01 |
| FAB DRW | 610-90729-01 |
| ASSY DRW | 620-90729-01 |
| SCH DRW | 630-90729-01 |


**Legal Disclaimer :**
The information given in this document shall in no event be regarded as a guarantee of conditions or characteristics. With respect to any examples or hints given herein, any typical values stated herein and/or any information regarding the application of the device, Infineon Technologies hereby disclaims any and all warranties and liabilities of any kind, including without limitation, warranties of non-infringement of intellectual property rights of any third party.


| | | | | |
|---|---|---|---|---|
| SCH Title : CYW920820M2IPA1 | | | | |
| Page Title: Title Page | | | | |
| Size | Document Number | Drawn By | Approved By | Rev |
| A4 | 630-90729-01 | SUC | CLEU | 2.0 |
| Date: Thursday, June 30, 2022 | | Sheet 1 of 6 | | |

# Block Diagram

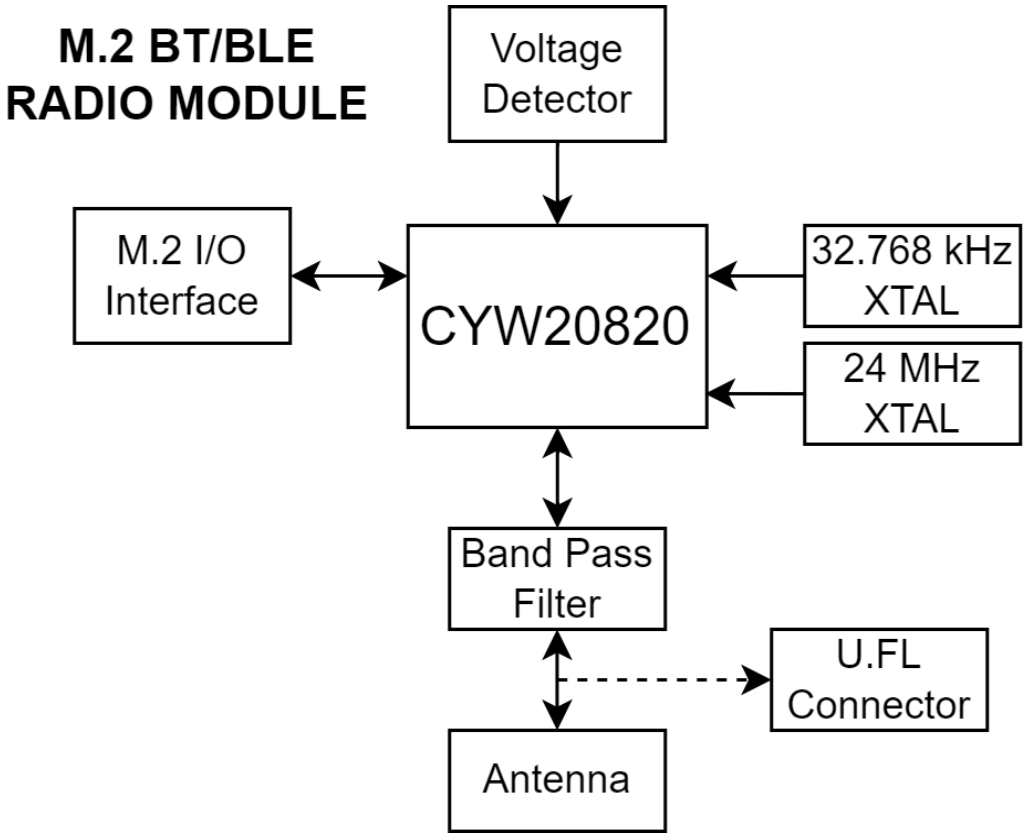


**Legal Disclaimer :**
**The information given in this document shall in no event be regarded as a guarantee of conditions or characteristics. With respect to any examples or hints given herein, any typical values stated herein and/or any information regarding the application of the device, Infineon Technologies hereby disclaims any and all warranties and liabilities of any kind, including without limitation, warranties of non-infringement of intellectual property rights of any third party.**

| | | | | |
|---|---|---|---|---|
| **SCH Title :** CYW920820M2IPA1 | | | | |
| **Page Title:** Block Diagram | | | | |
| Size | Document Number | Drawn By | Approved By | Rev |
| A4 | **630-90729-01** | **SUC** | **CLEU** | **2.0** |
| Date: Thursday, June 30, 2022 | | Sheet **2** of **6** | | |

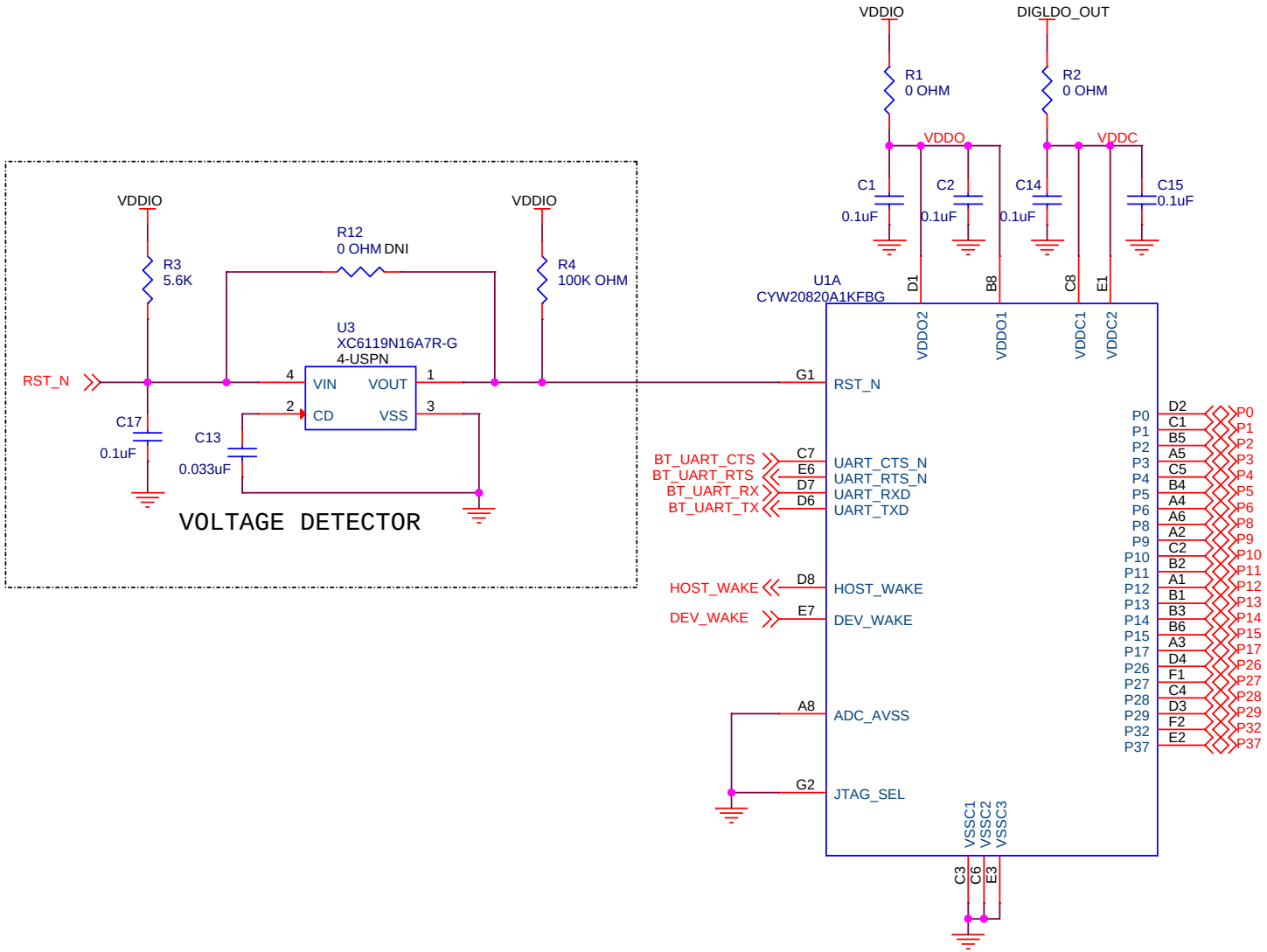


**Legal Disclaimer :**
**The information given in this document shall in no event be regarded as a guarantee of conditions or characteristics. With respect to any examples or hints given herein, any typical values stated herein and/or any information regarding the application of the device, Infineon Technologies hereby disclaims any and all warranties and liabilities of any kind, including without limitation, warranties of non-infringement of intellectual property rights of any third party.**

| | | | | |
|---|---|---|---|---|
| **SCH Title : CYW920820M2IPA1** | | | | |
| **Page Title: Baseband** | | | | |
| Size | Document Number | Drawn By | Approved By | Rev |
| A4 | **630-90729-01** | **SUC** | **CLEU** | **2.0** |
| Date: Thursday, June 30, 2022 | | Sheet **3** of **6** | | |

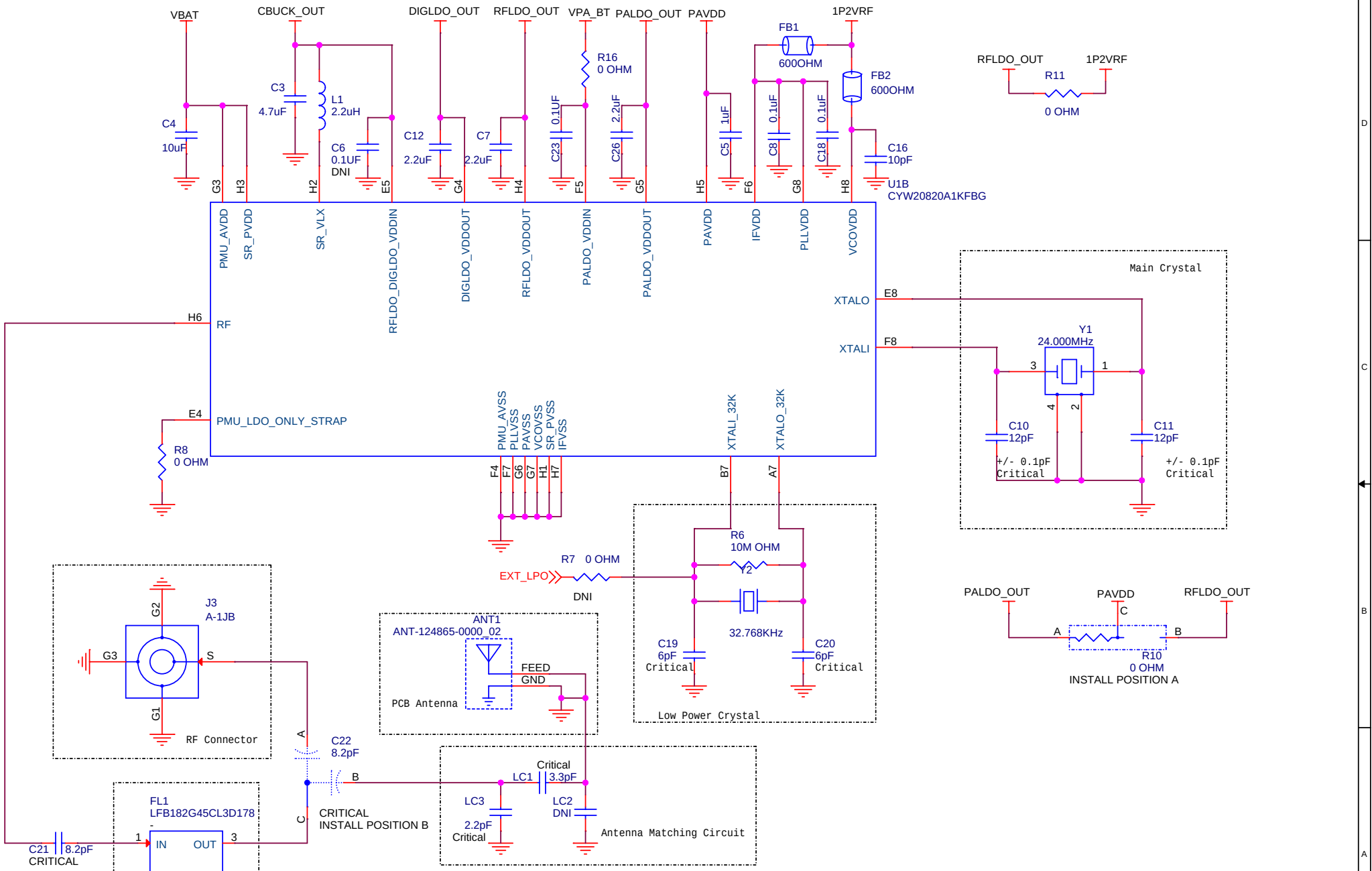


**Legal Disclaimer :**
**The information given in this document shall in no event be regarded as a guarantee of conditions or characteristics. With respect to any examples or hints given herein, any typical values stated herein and/or any information regarding the application of the device, Infineon Technologies hereby disclaims any and all warranties and liabilities of any kind, including without limitation, warranties of non-infringement of intellectual property rights of any third party.**

| | | | | |
|---|---|---|---|---|
| **SCH Title : CYW920820M2IPA1** | | | | |
| **Page Title: Radio** | | | | |
| Size | Document Number | Drawn By | Approved By | Rev |
| A4 | **630-90729-01** | **SUC** | **CLEU** | **2.0** |
| Date: Monday, July 18, 2022 | | Sheet **4** of **6** | | |

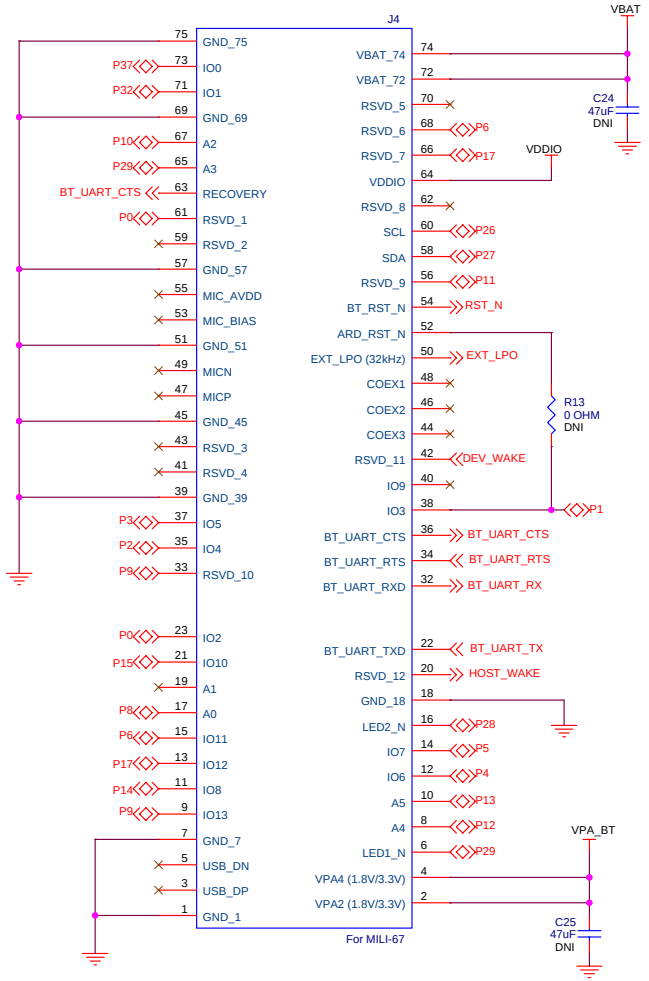


**Legal Disclaimer :**
The information given in this document shall in no event be regarded as a guarantee of conditions or characteristics. With respect to any examples or hints given herein, any typical values stated herein and/or any information regarding the application of the device, Infineon Technologies hereby disclaims any and all warranties and liabilities of any kind, including without limitation, warranties of non-infringement of intellectual property rights of any third party.

| | | | | |
|---|---|---|---|---|
| SCH Title : CYW920820M2IPA1 | | | | |
| Page Title: Interface to Baseboard | | | | |
| Size | Document Number | Drawn By | Approved By | Rev |
| A3 | 630-90729-01 | SUC | CLEU | 2.0 |
| Date: Monday, July 11, 2022 | | | Sheet 5 of 6 | |

# REVISION HISTORY

| REV | DESCRIPTION OF CHANGE | Orig. of Change | DATE |
|---|---|---|---|
| 1.0 | Initial Release | CLEU | 11/30/2020 |
| 1.1 | Updated CL1 to 3.3pF and CL3 to 2.2pF | CLEU | 1/17/2022 |
| 2.0 | Removed 3.0V LDO | SUC | 6/28/2022 |
| | | | |
| | | | |
| | | | |
| | | | |
| | | | |
| | | | |
| | | | |
| | | | |
| | | | |
| | | | |

**Legal Disclaimer :**
The information given in this document shall in no event be regarded as a guarantee of conditions or characteristics. With respect to any examples or hints given herein, any typical values stated herein and/or any information regarding the application of the device, Infineon Technologies hereby disclaims any and all warranties and liabilities of any kind, including without limitation, warranties of non-infringement of intellectual property rights of any third party.

SCH Title : CYW920820M2IPA1

Page Title: Revision History

| Size | Document Number | Drawn By | Approved By | Rev |
|---|---|---|---|---|
| A4 | 630-90729-01 | SUC | CLEU | 2.0 |

Date: Thursday, June 30, 2022 Sheet 6 of 6